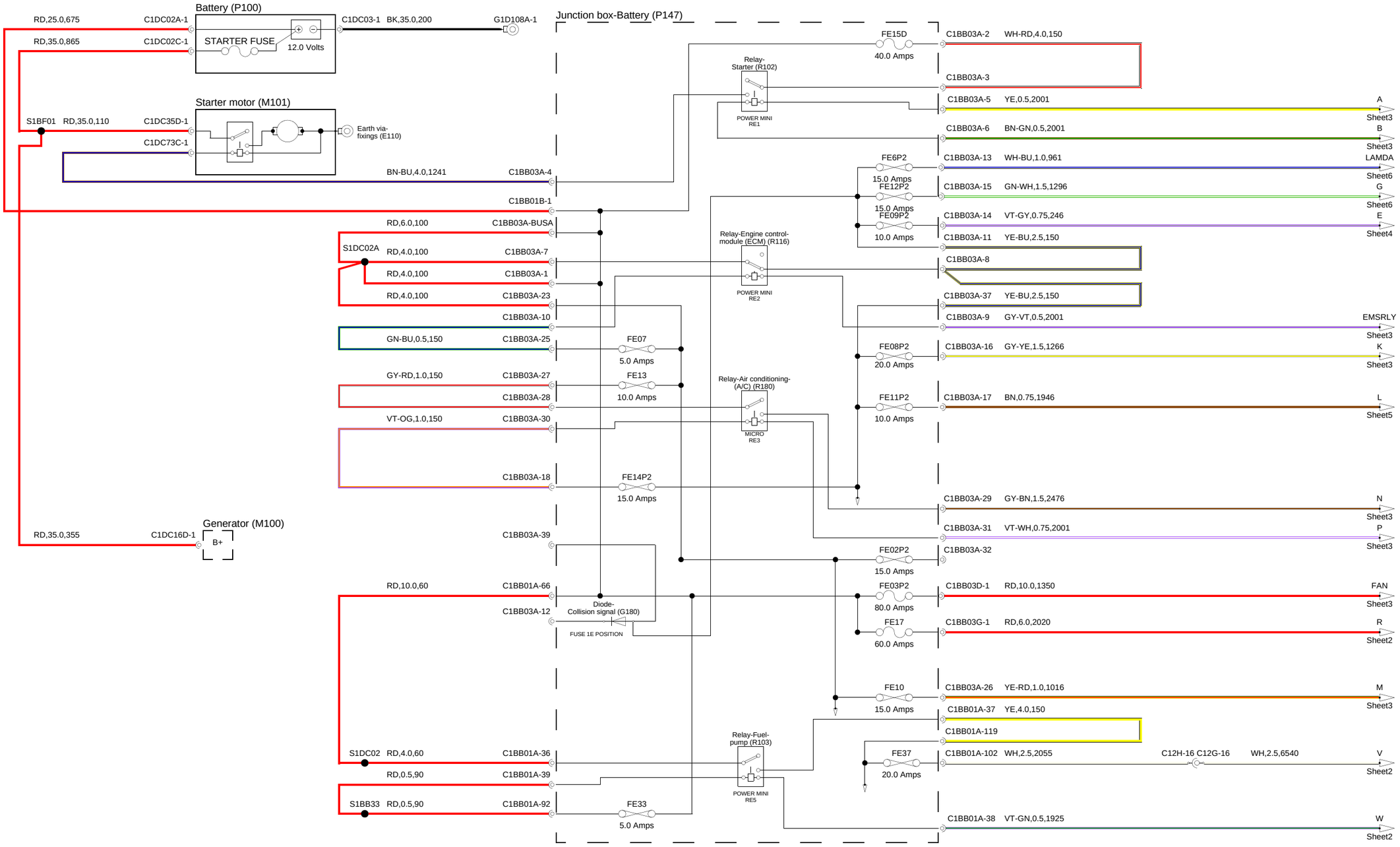
Battery (P100)
STARTER FUSE
12.0 Volts
RD,25.0,675
C1DC02A-1
RD,35.0,865
C1DC02C-1
C1DC03-1
BK,35.0,200
G1D108A-1
Junction box-Battery (P147)
Starter motor (M101)
S1BF01
RD,35.0,110
C1DC35D-1
C1DC73C-1
Earth via-fixings (E110)
BN-BU,4.0,1241
C1BB03A-4
C1BB01B-1
RD,6.0,100
C1BB03A-BUSA
S1DC02A
RD,4.0,100
C1BB03A-7
C1BB03A-1
C1BB03A-23
C1BB03A-10
GN-BU,0.5,150
C1BB03A-25
GY-RD,1.0,150
C1BB03A-27
C1BB03A-28
VT-OG,1.0,150
C1BB03A-30
C1BB03A-18
Generator (M100)
RD,35.0,355
C1DC16D-1
B+
C1BB03A-39
RD,10.0,60
C1BB01A-66
C1BB03A-12
Diode-Collision signal (G180)
FUSE 1E POSITION
S1DC02
RD,4.0,60
C1BB01A-36
RD,0.5,90
C1BB01A-39
S1BB33
RD,0.5,90
C1BB01A-92
FE07
5.0 Amps
FE13
10.0 Amps
FE14P2
15.0 Amps
FE33
5.0 Amps
Relay-Starter (R102)
POWER MINI RE1
Relay-Engine control-module (ECM) (R116)
POWER MINI RE2
Relay-Air conditioning-(A/C) (R180)
MICRO RE3
Relay-Fuel-pump (R103)
POWER MINI RE5
FE15D
40.0 Amps
FE6P2
15.0 Amps
FE12P2
15.0 Amps
FE09P2
10.0 Amps
FE08P2
20.0 Amps
FE11P2
10.0 Amps
FE02P2
15.0 Amps
FE03P2
80.0 Amps
FE17
60.0 Amps
FE10
15.0 Amps
FE37
20.0 Amps
C1BB03A-2 WH-RD,4.0,150
C1BB03A-3
C1BB03A-5 YE,0.5,2001
A
Sheet3
C1BB03A-6 BN-GN,0.5,2001
B
Sheet3
C1BB03A-13 WH-BU,1.0,961
LAMDA
Sheet6
C1BB03A-15 GN-WH,1.5,1296
G
Sheet6
C1BB03A-14 VT-GY,0.75,246
E
Sheet4
C1BB03A-11 YE-BU,2.5,150
C1BB03A-8
C1BB03A-37 YE-BU,2.5,150
C1BB03A-9 GY-VT,0.5,2001
EMSRLY
Sheet3
C1BB03A-16 GY-YE,1.5,1266
K
Sheet3
C1BB03A-17 BN,0.75,1946
L
Sheet5
C1BB03A-29 GY-BN,1.5,2476
N
Sheet3
C1BB03A-31 VT-WH,0.75,2001
P
Sheet3
C1BB03A-32
C1BB03D-1 RD,10.0,1350
FAN
Sheet3
C1BB03G-1 RD,6.0,2020
R
Sheet2
C1BB03A-26 YE-RD,1.0,1016
M
Sheet3
C1BB01A-37 YE,4.0,150
C1BB01A-119
C1BB01A-102 WH,2.5,2055
C12H-16 C12G-16
WH,2.5,6540
V
Sheet2
C1BB01A-38 VT-GN,0.5,1925
W
Sheet2

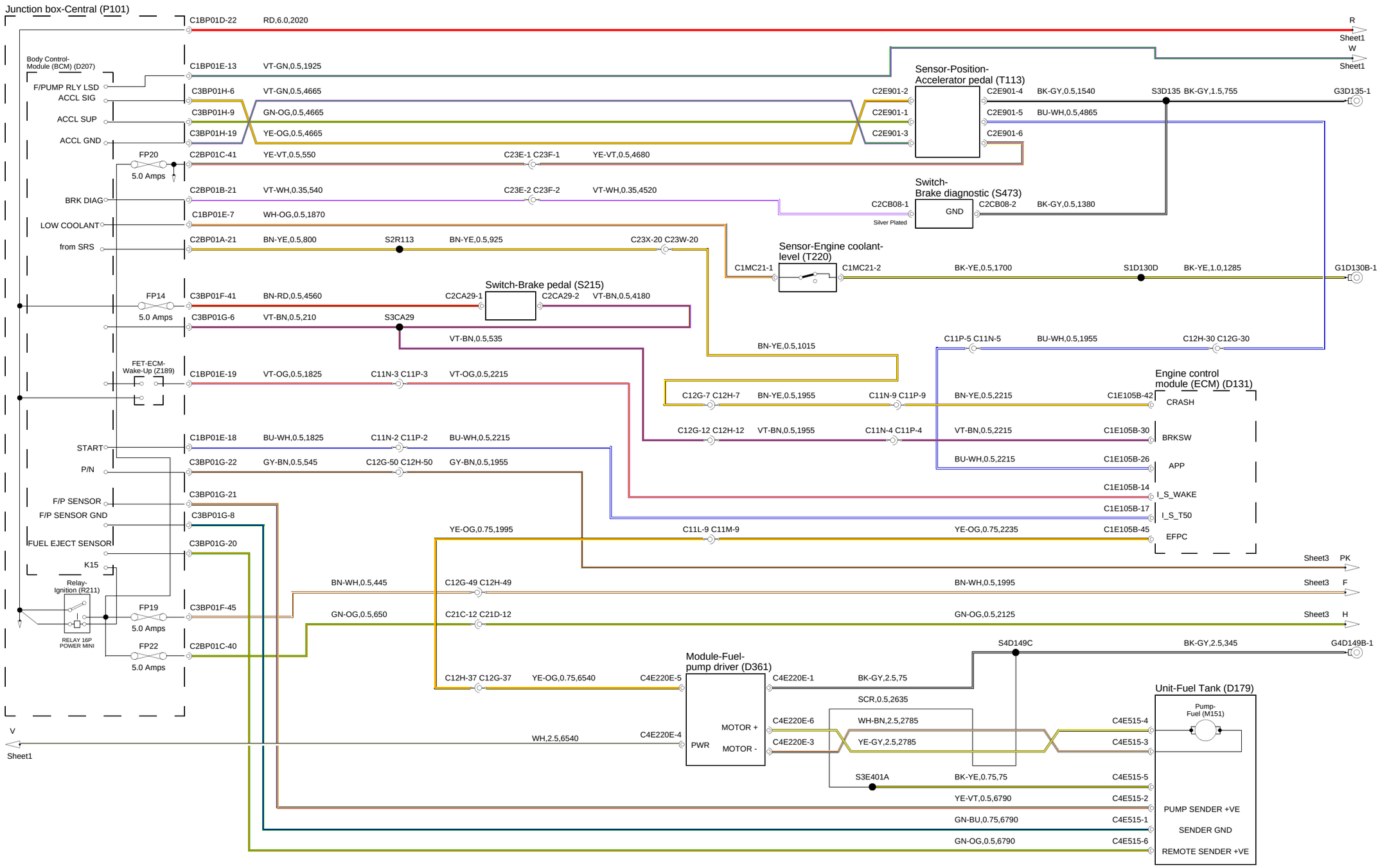
Junction box-Central (P101)
C1BP01D-22 RD,6.0,2020
R
Sheet1
W
Sheet1
Body Control-Module (BCM) (D207)
F/PUMP RLY LSD
ACCL SIG
ACCL SUP
ACCL GND
C1BP01E-13 VT-GN,0.5,1925
C3BP01H-6 VT-GN,0.5,4665
C3BP01H-9 GN-OG,0.5,4665
C3BP01H-19 YE-OG,0.5,4665
Sensor-Position-Accelerator pedal (T113)
C2E901-2
C2E901-1
C2E901-3
C2E901-4 BK-GY,0.5,1540
C2E901-5 BU-WH,0.5,4865
C2E901-6
S3D135 BK-GY,1.5,755
G3D135-1
FP20
5.0 Amps
C2BP01C-41 YE-VT,0.5,550
C23E-1 C23F-1 YE-VT,0.5,4680
BRK DIAG
C2BP01B-21 VT-WH,0.35,540
C23E-2 C23F-2 VT-WH,0.35,4520
Switch-Brake diagnostic (S473)
C2CB08-1
Silver Plated
GND
C2CB08-2 BK-GY,0.5,1380
LOW COOLANT
C1BP01E-7 WH-OG,0.5,1870
from SRS
C2BP01A-21 BN-YE,0.5,800
S2R113 BN-YE,0.5,925
C23X-20 C23W-20
Sensor-Engine coolant-level (T220)
C1MC21-1
C1MC21-2 BK-YE,0.5,1700
S1D130D BK-YE,1.0,1285
G1D130B-1
FP14
5.0 Amps
C3BP01F-41 BN-RD,0.5,4560
C2CA29-1
Switch-Brake pedal (S215)
C2CA29-2 VT-BN,0.5,4180
C3BP01G-6 VT-BN,0.5,210
S3CA29
VT-BN,0.5,535
BN-YE,0.5,1015
C11P-5 C11N-5 BU-WH,0.5,1955
C12H-30 C12G-30
FET-ECM-Wake-Up (Z189)
C1BP01E-19 VT-OG,0.5,1825
C11N-3 C11P-3 VT-OG,0.5,2215
Engine control module (ECM) (D131)
C12G-7 C12H-7 BN-YE,0.5,1955
C11N-9 C11P-9 BN-YE,0.5,2215
C1E105B-42 CRASH
C12G-12 C12H-12 VT-BN,0.5,1955
C11N-4 C11P-4 VT-BN,0.5,2215
C1E105B-30 BRKSW
START
C1BP01E-18 BU-WH,0.5,1825
C11N-2 C11P-2 BU-WH,0.5,2215
BU-WH,0.5,2215
C1E105B-26 APP
P/N
C3BP01G-22 GY-BN,0.5,545
C12G-50 C12H-50 GY-BN,0.5,1955
C1E105B-14 I_S_WAKE
F/P SENSOR
C3BP01G-21
F/P SENSOR GND
C3BP01G-8
C1E105B-17 I_S_T50
FUEL EJECT SENSOR
C3BP01G-20
YE-OG,0.75,1995
C11L-9 C11M-9
YE-OG,0.75,2235
C1E105B-45 EFPC
K15
Sheet3 PK
Relay-Ignition (R211)
BN-WH,0.5,445
C12G-49 C12H-49
BN-WH,0.5,1995
Sheet3 F
FP19
5.0 Amps
C3BP01F-45
GN-OG,0.5,650
C21C-12 C21D-12
GN-OG,0.5,2125
Sheet3 H
RELAY 16P POWER MINI
FP22
5.0 Amps
C2BP01C-40
S4D149C
BK-GY,2.5,345
G4D149B-1
Module-Fuel-pump driver (D361)
C12H-37 C12G-37 YE-OG,0.75,6540
C4E220E-5
C4E220E-1 BK-GY,2.5,75
SCR,0.5,2635
Unit-Fuel Tank (D179)
Pump-Fuel (M151)
C4E220E-6
WH-BN,2.5,2785
C4E515-4
MOTOR +
V
WH,2.5,6540
C4E220E-4
PWR
C4E220E-3
YE-GY,2.5,2785
C4E515-3
MOTOR -
Sheet1
S3E401A
BK-YE,0.75,75
C4E515-5
YE-VT,0.5,6790
C4E515-2
PUMP SENDER +VE
GN-BU,0.75,6790
C4E515-1
SENDER GND
GN-OG,0.5,6790
C4E515-6
REMOTE SENDER +VE

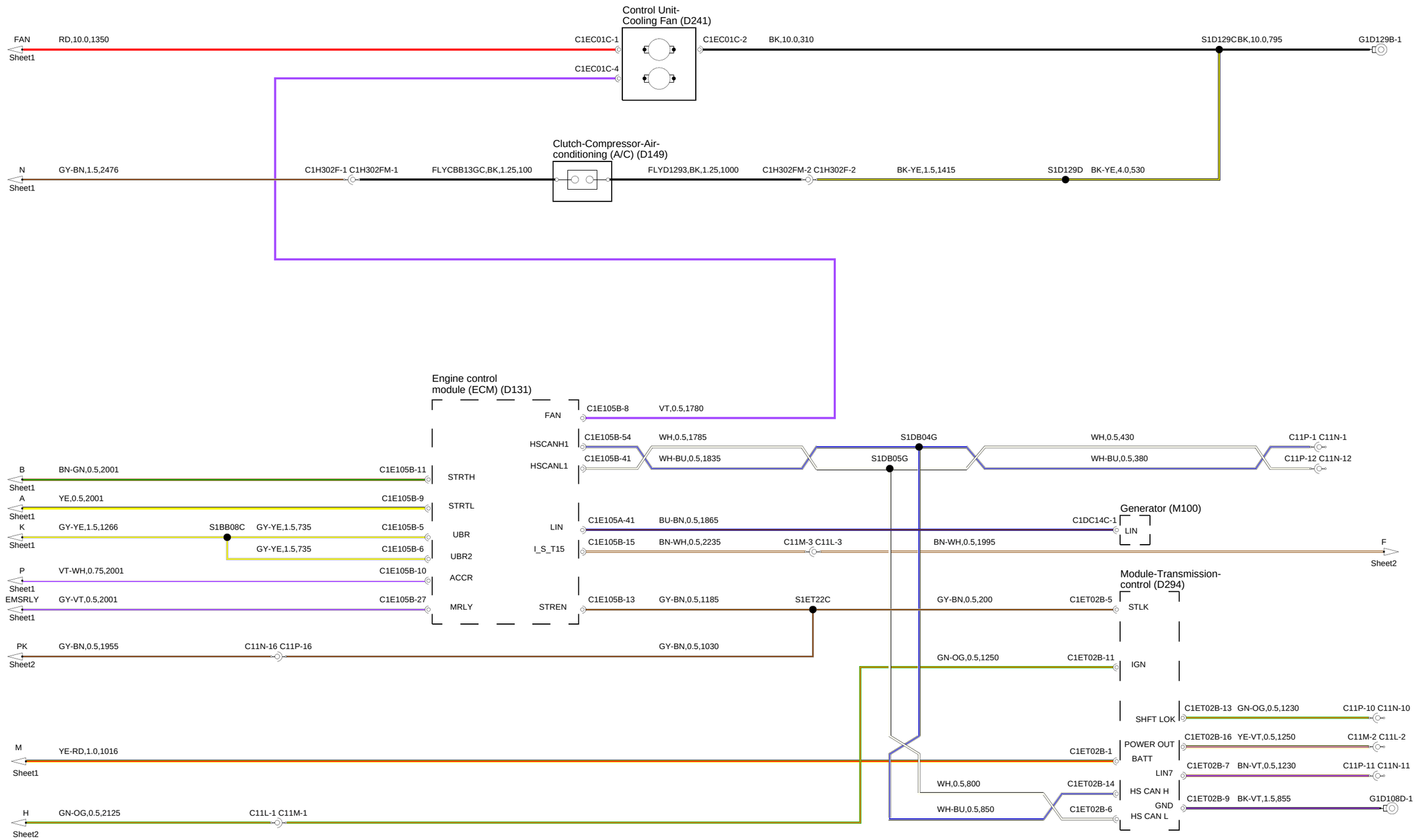
Control Unit-
Cooling Fan (D241)
FAN
Sheet1
RD,10.0,1350
C1EC01C-1
C1EC01C-2
BK,10.0,310
S1D129C
BK,10.0,795
G1D129B-1
C1EC01C-4
Clutch-Compressor-Air-
conditioning (A/C) (D149)
N
Sheet1
GY-BN,1.5,2476
C1H302F-1
C1H302FM-1
FLYCBB13GC,BK,1.25,100
FLYD1293,BK,1.25,1000
C1H302FM-2
C1H302F-2
BK-YE,1.5,1415
S1D129D
BK-YE,4.0,530
Engine control
module (ECM) (D131)
FAN
C1E105B-8
VT,0.5,1780
HSCANH1
C1E105B-54
WH,0.5,1785
S1DB04G
WH,0.5,430
C11P-1
C11N-1
HSCANL1
C1E105B-41
WH-BU,0.5,1835
S1DB05G
WH-BU,0.5,380
C11P-12
C11N-12
B
Sheet1
BN-GN,0.5,2001
C1E105B-11
STRTH
A
Sheet1
YE,0.5,2001
C1E105B-9
STRTL
K
Sheet1
GY-YE,1.5,1266
S1BB08C
GY-YE,1.5,735
C1E105B-5
UBR
GY-YE,1.5,735
C1E105B-6
UBR2
LIN
C1E105A-41
BU-BN,0.5,1865
C1DC14C-1
Generator (M100)
LIN
I_S_T15
C1E105B-15
BN-WH,0.5,2235
C11M-3
C11L-3
BN-WH,0.5,1995
F
Sheet2
P
Sheet1
VT-WH,0.75,2001
C1E105B-10
ACCR
EMSRLY
Sheet1
GY-VT,0.5,2001
C1E105B-27
MRLY
STREN
C1E105B-13
GY-BN,0.5,1185
S1ET22C
GY-BN,0.5,200
C1ET02B-5
Module-Transmission-
control (D294)
STLK
PK
Sheet2
GY-BN,0.5,1955
C11N-16
C11P-16
GY-BN,0.5,1030
GN-OG,0.5,1250
C1ET02B-11
IGN
SHFT LOK
C1ET02B-13
GN-OG,0.5,1230
C11P-10
C11N-10
M
Sheet1
YE-RD,1.0,1016
C1ET02B-1
POWER OUT
BATT
C1ET02B-16
YE-VT,0.5,1250
C11M-2
C11L-2
LIN7
C1ET02B-7
BN-VT,0.5,1230
C11P-11
C11N-11
WH,0.5,800
C1ET02B-14
HS CAN H
GND
HS CAN L
C1ET02B-9
BK-VT,1.5,855
G1D108D-1
WH-BU,0.5,850
C1ET02B-6
H
Sheet2
GN-OG,0.5,2125
C11L-1
C11M-1

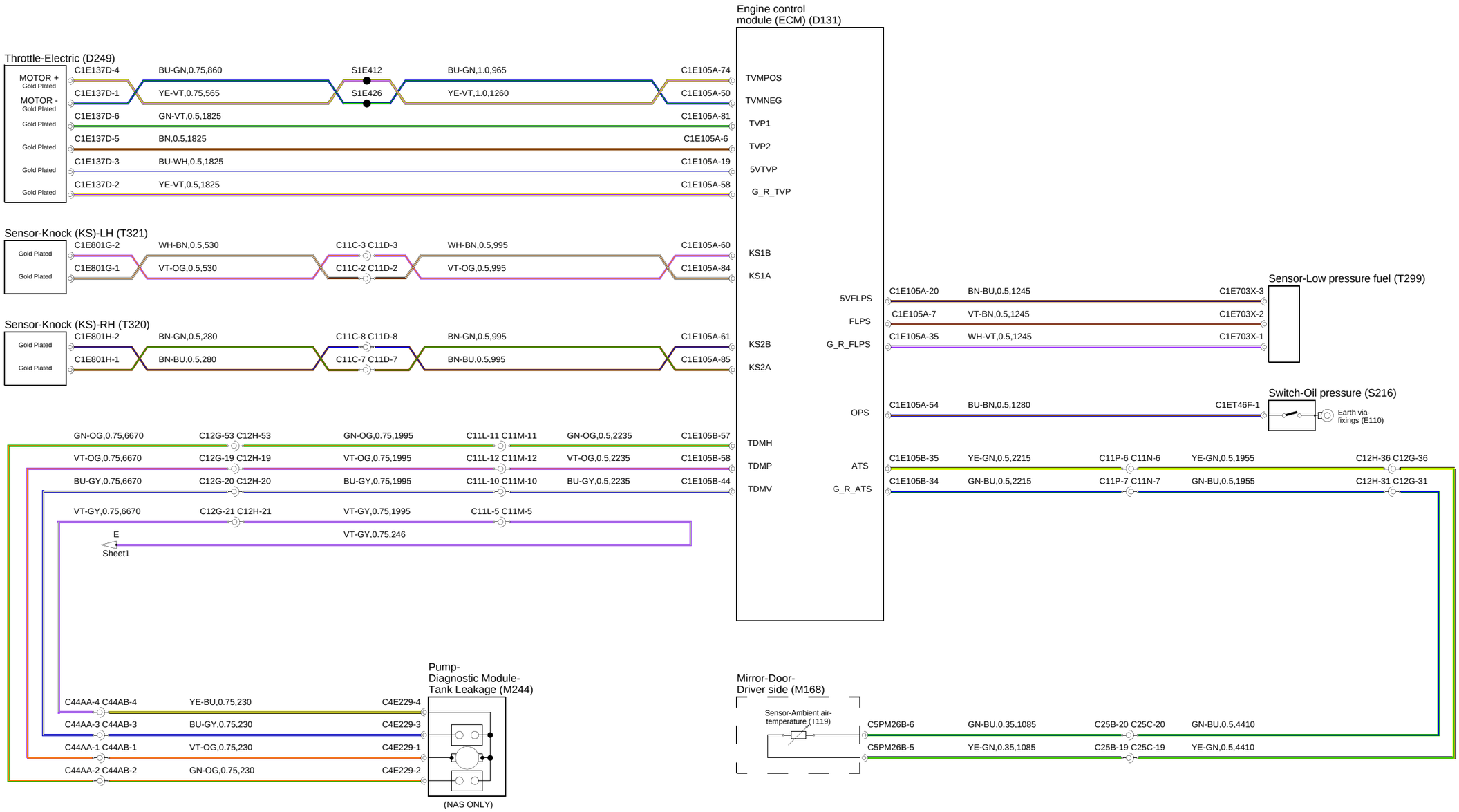
Engine control module (ECM) (D131)
Throttle-Electric (D249)
MOTOR + Gold Plated
MOTOR - Gold Plated
Gold Plated
C1E137D-4 BU-GN,0.75,860 S1E412 BU-GN,1.0,965 C1E105A-74 TVMPOS
C1E137D-1 YE-VT,0.75,565 S1E426 YE-VT,1.0,1260 C1E105A-50 TVMNEG
C1E137D-6 GN-VT,0.5,1825 C1E105A-81 TVP1
C1E137D-5 BN,0.5,1825 C1E105A-6 TVP2
C1E137D-3 BU-WH,0.5,1825 C1E105A-19 5VTVP
C1E137D-2 YE-VT,0.5,1825 C1E105A-58 G_R_TVP
Sensor-Knock (KS)-LH (T321)
C1E801G-2 WH-BN,0.5,530 C11C-3 C11D-3 WH-BN,0.5,995 C1E105A-60 KS1B
C1E801G-1 VT-OG,0.5,530 C11C-2 C11D-2 VT-OG,0.5,995 C1E105A-84 KS1A
Sensor-Knock (KS)-RH (T320)
C1E801H-2 BN-GN,0.5,280 C11C-8 C11D-8 BN-GN,0.5,995 C1E105A-61 KS2B
C1E801H-1 BN-BU,0.5,280 C11C-7 C11D-7 BN-BU,0.5,995 C1E105A-85 KS2A
Sensor-Low pressure fuel (T299)
5VFLPS C1E105A-20 BN-BU,0.5,1245 C1E703X-3
FLPS C1E105A-7 VT-BN,0.5,1245 C1E703X-2
G_R_FLPS C1E105A-35 WH-VT,0.5,1245 C1E703X-1
Switch-Oil pressure (S216)
OPS C1E105A-54 BU-BN,0.5,1280 C1ET46F-1
Earth via-fixings (E110)
GN-OG,0.75,6670 C12G-53 C12H-53 GN-OG,0.75,1995 C11L-11 C11M-11 GN-OG,0.5,2235 C1E105B-57 TDMH
VT-OG,0.75,6670 C12G-19 C12H-19 VT-OG,0.75,1995 C11L-12 C11M-12 VT-OG,0.5,2235 C1E105B-58 TDMP
BU-GY,0.75,6670 C12G-20 C12H-20 BU-GY,0.75,1995 C11L-10 C11M-10 BU-GY,0.5,2235 C1E105B-44 TDMV
VT-GY,0.75,6670 C12G-21 C12H-21 VT-GY,0.75,1995 C11L-5 C11M-5
E VT-GY,0.75,246
Sheet1
ATS C1E105B-35 YE-GN,0.5,2215 C11P-6 C11N-6 YE-GN,0.5,1955 C12H-36 C12G-36
G_R_ATS C1E105B-34 GN-BU,0.5,2215 C11P-7 C11N-7 GN-BU,0.5,1955 C12H-31 C12G-31
Pump-Diagnostic Module-Tank Leakage (M244)
C44AA-4 C44AB-4 YE-BU,0.75,230 C4E229-4
C44AA-3 C44AB-3 BU-GY,0.75,230 C4E229-3
C44AA-1 C44AB-1 VT-OG,0.75,230 C4E229-1
C44AA-2 C44AB-2 GN-OG,0.75,230 C4E229-2
(NAS ONLY)
Mirror-Door-Driver side (M168)
Sensor-Ambient air-temperature (T119)
C5PM26B-6 GN-BU,0.35,1085 C25B-20 C25C-20 GN-BU,0.5,4410
C5PM26B-5 YE-GN,0.35,1085 C25B-19 C25C-19 YE-GN,0.5,4410

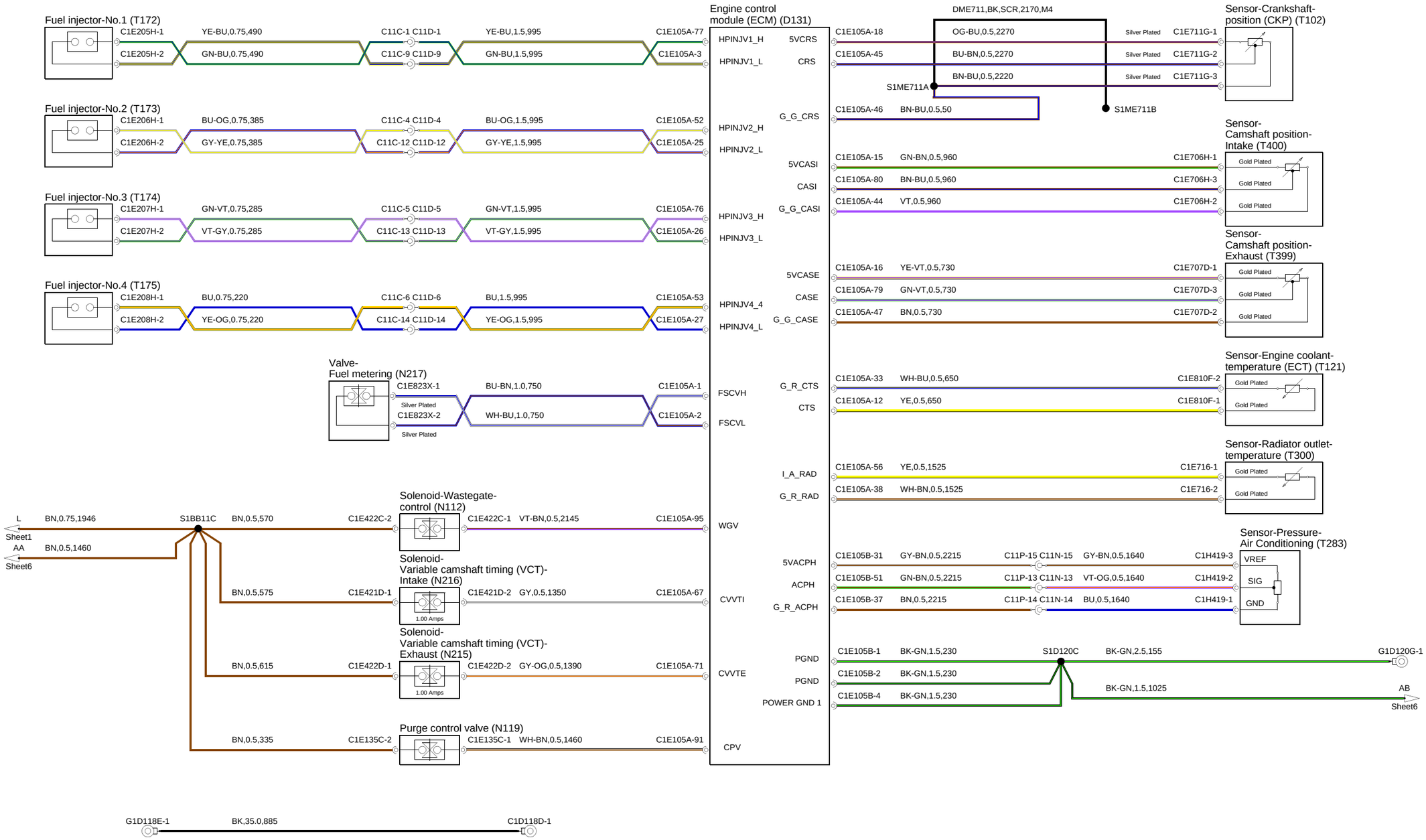
Fuel injector-No.1 (T172)
C1E205H-1
C1E205H-2
YE-BU,0.75,490
GN-BU,0.75,490
C11C-1 C11D-1
C11C-9 C11D-9
YE-BU,1.5,995
GN-BU,1.5,995
C1E105A-77
C1E105A-3
Fuel injector-No.2 (T173)
C1E206H-1
C1E206H-2
BU-OG,0.75,385
GY-YE,0.75,385
C11C-4 C11D-4
C11C-12 C11D-12
BU-OG,1.5,995
GY-YE,1.5,995
C1E105A-52
C1E105A-25
Fuel injector-No.3 (T174)
C1E207H-1
C1E207H-2
GN-VT,0.75,285
VT-GY,0.75,285
C11C-5 C11D-5
C11C-13 C11D-13
GN-VT,1.5,995
VT-GY,1.5,995
C1E105A-76
C1E105A-26
Fuel injector-No.4 (T175)
C1E208H-1
C1E208H-2
BU,0.75,220
YE-OG,0.75,220
C11C-6 C11D-6
C11C-14 C11D-14
BU,1.5,995
YE-OG,1.5,995
C1E105A-53
C1E105A-27
Valve-
Fuel metering (N217)
C1E823X-1
Silver Plated
C1E823X-2
Silver Plated
BU-BN,1.0,750
WH-BU,1.0,750
C1E105A-1
C1E105A-2
Engine control
module (ECM) (D131)
HPINJV1_H
HPINJV1_L
HPINJV2_H
HPINJV2_L
HPINJV3_H
HPINJV3_L
HPINJV4_4
HPINJV4_L
FSCVH
FSCVL
WGV
CVVTI
CVVTE
CPV
5VCRS
CRS
G_G_CRS
5VCASI
CASI
G_G_CASI
5VCASE
CASE
G_G_CASE
G_R_CTS
CTS
I_A_RAD
G_R_RAD
5VACPH
ACPH
G_R_ACPH
PGND
PGND
POWER GND 1
DME711,BK,SCR,2170,M4
C1E105A-18
OG-BU,0.5,2270
Silver Plated
C1E711G-1
C1E105A-45
BU-BN,0.5,2270
Silver Plated
C1E711G-2
BN-BU,0.5,2220
Silver Plated
C1E711G-3
S1ME711A
S1ME711B
C1E105A-46
BN-BU,0.5,50
Sensor-Crankshaft-
position (CKP) (T102)
C1E105A-15
GN-BN,0.5,960
C1E706H-1
C1E105A-80
BN-BU,0.5,960
C1E706H-3
C1E105A-44
VT,0.5,960
C1E706H-2
Gold Plated
Sensor-
Camshaft position-
Intake (T400)
C1E105A-16
YE-VT,0.5,730
C1E707D-1
C1E105A-79
GN-VT,0.5,730
C1E707D-3
C1E105A-47
BN,0.5,730
C1E707D-2
Sensor-
Camshaft position-
Exhaust (T399)
C1E105A-33
WH-BU,0.5,650
C1E810F-2
C1E105A-12
YE,0.5,650
C1E810F-1
Sensor-Engine coolant-
temperature (ECT) (T121)
C1E105A-56
YE,0.5,1525
C1E716-1
C1E105A-38
WH-BN,0.5,1525
C1E716-2
Sensor-Radiator outlet-
temperature (T300)
C1E105B-31
GY-BN,0.5,2215
C11P-15 C11N-15
GY-BN,0.5,1640
C1H419-3
C1E105B-51
GN-BN,0.5,2215
C11P-13 C11N-13
VT-OG,0.5,1640
C1H419-2
C1E105B-37
BN,0.5,2215
C11P-14 C11N-14
BU,0.5,1640
C1H419-1
VREF
SIG
GND
Sensor-Pressure-
Air Conditioning (T283)
C1E105B-1
BK-GN,1.5,230
S1D120C
BK-GN,2.5,155
G1D120G-1
C1E105B-2
BK-GN,1.5,230
BK-GN,1.5,1025
AB
Sheet6
C1E105B-4
BK-GN,1.5,230
L
Sheet1
BN,0.75,1946
S1BB11C
BN,0.5,570
C1E422C-2
AA
Sheet6
BN,0.5,1460
Solenoid-Wastegate-
control (N112)
C1E422C-1
VT-BN,0.5,2145
C1E105A-95
BN,0.5,575
C1E421D-1
Solenoid-
Variable camshaft timing (VCT)-
Intake (N216)
C1E421D-2
GY,0.5,1350
C1E105A-67
1.00 Amps
BN,0.5,615
C1E422D-1
Solenoid-
Variable camshaft timing (VCT)-
Exhaust (N215)
C1E422D-2
GY-OG,0.5,1390
C1E105A-71
1.00 Amps
BN,0.5,335
C1E135C-2
Purge control valve (N119)
C1E135C-1
WH-BN,0.5,1460
C1E105A-91
G1D118E-1
BK,35.0,885
C1D118D-1

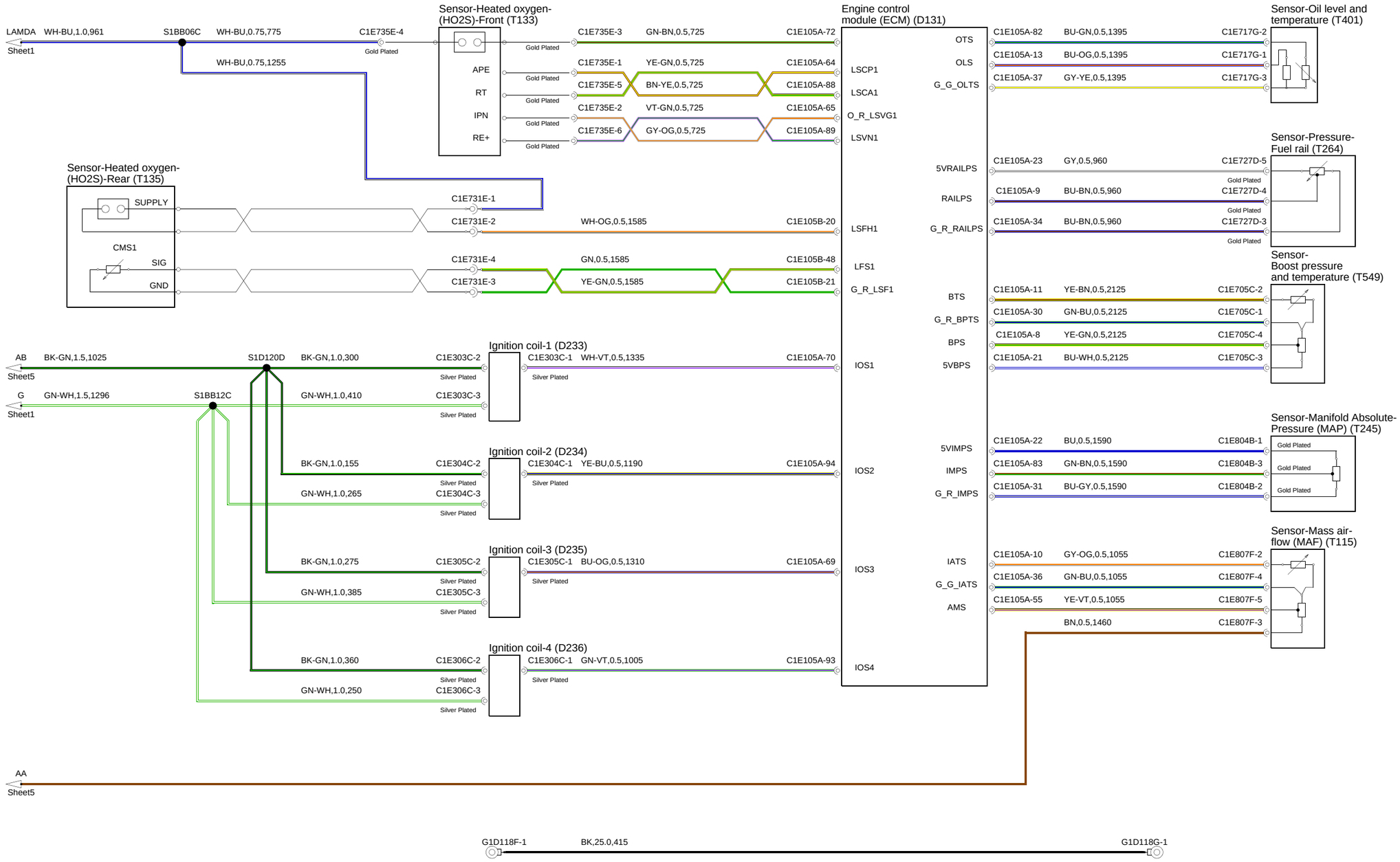
Sensor-Heated oxygen-(HO2S)-Front (T133)
Engine control module (ECM) (D131)
Sensor-Oil level and temperature (T401)
LAMDA
Sheet1
WH-BU,1.0,961
S1BB06C
WH-BU,0.75,775
C1E735E-4
Gold Plated
WH-BU,0.75,1255
APE
RT
IPN
RE+
C1E735E-3
GN-BN,0.5,725
C1E105A-72
C1E735E-1
YE-GN,0.5,725
C1E105A-64
C1E735E-5
BN-YE,0.5,725
C1E105A-88
C1E735E-2
VT-GN,0.5,725
C1E105A-65
C1E735E-6
GY-OG,0.5,725
C1E105A-89
LSCP1
LSCA1
O_R_LSVG1
LSVN1
OTS
OLS
G_G_OLTS
C1E105A-82
BU-GN,0.5,1395
C1E717G-2
C1E105A-13
BU-OG,0.5,1395
C1E717G-1
C1E105A-37
GY-YE,0.5,1395
C1E717G-3
Sensor-Pressure-Fuel rail (T264)
Sensor-Heated oxygen-(HO2S)-Rear (T135)
SUPPLY
CMS1
SIG
GND
C1E731E-1
C1E731E-2
WH-OG,0.5,1585
C1E105B-20
C1E731E-4
GN,0.5,1585
C1E105B-48
C1E731E-3
YE-GN,0.5,1585
C1E105B-21
LSFH1
LFS1
G_R_LSF1
5VRAILPS
RAILPS
G_R_RAILPS
C1E105A-23
GY,0.5,960
C1E727D-5
C1E105A-9
BU-BN,0.5,960
C1E727D-4
C1E105A-34
BU-BN,0.5,960
C1E727D-3
Sensor-Boost pressure and temperature (T549)
BTS
G_R_BPTS
BPS
5VBPS
C1E105A-11
YE-BN,0.5,2125
C1E705C-2
C1E105A-30
GN-BU,0.5,2125
C1E705C-1
C1E105A-8
YE-GN,0.5,2125
C1E705C-4
C1E105A-21
BU-WH,0.5,2125
C1E705C-3
Ignition coil-1 (D233)
AB
Sheet5
BK-GN,1.5,1025
S1D120D
BK-GN,1.0,300
C1E303C-2
C1E303C-1
WH-VT,0.5,1335
C1E105A-70
IOS1
G
Sheet1
GN-WH,1.5,1296
S1BB12C
GN-WH,1.0,410
C1E303C-3
Silver Plated
Sensor-Manifold Absolute-Pressure (MAP) (T245)
Ignition coil-2 (D234)
BK-GN,1.0,155
C1E304C-2
C1E304C-1
YE-BU,0.5,1190
C1E105A-94
IOS2
GN-WH,1.0,265
C1E304C-3
5VIMPS
IMPS
G_R_IMPS
C1E105A-22
BU,0.5,1590
C1E804B-1
C1E105A-83
GN-BN,0.5,1590
C1E804B-3
C1E105A-31
BU-GY,0.5,1590
C1E804B-2
Ignition coil-3 (D235)
BK-GN,1.0,275
C1E305C-2
C1E305C-1
BU-OG,0.5,1310
C1E105A-69
IOS3
GN-WH,1.0,385
C1E305C-3
Sensor-Mass air-flow (MAF) (T115)
IATS
G_G_IATS
AMS
C1E105A-10
GY-OG,0.5,1055
C1E807F-2
C1E105A-36
GN-BU,0.5,1055
C1E807F-4
C1E105A-55
YE-VT,0.5,1055
C1E807F-5
BN,0.5,1460
C1E807F-3
Ignition coil-4 (D236)
BK-GN,1.0,360
C1E306C-2
C1E306C-1
GN-VT,0.5,1005
C1E105A-93
IOS4
GN-WH,1.0,250
C1E306C-3
AA
Sheet5
G1D118F-1
BK,25.0,415
G1D118G-1

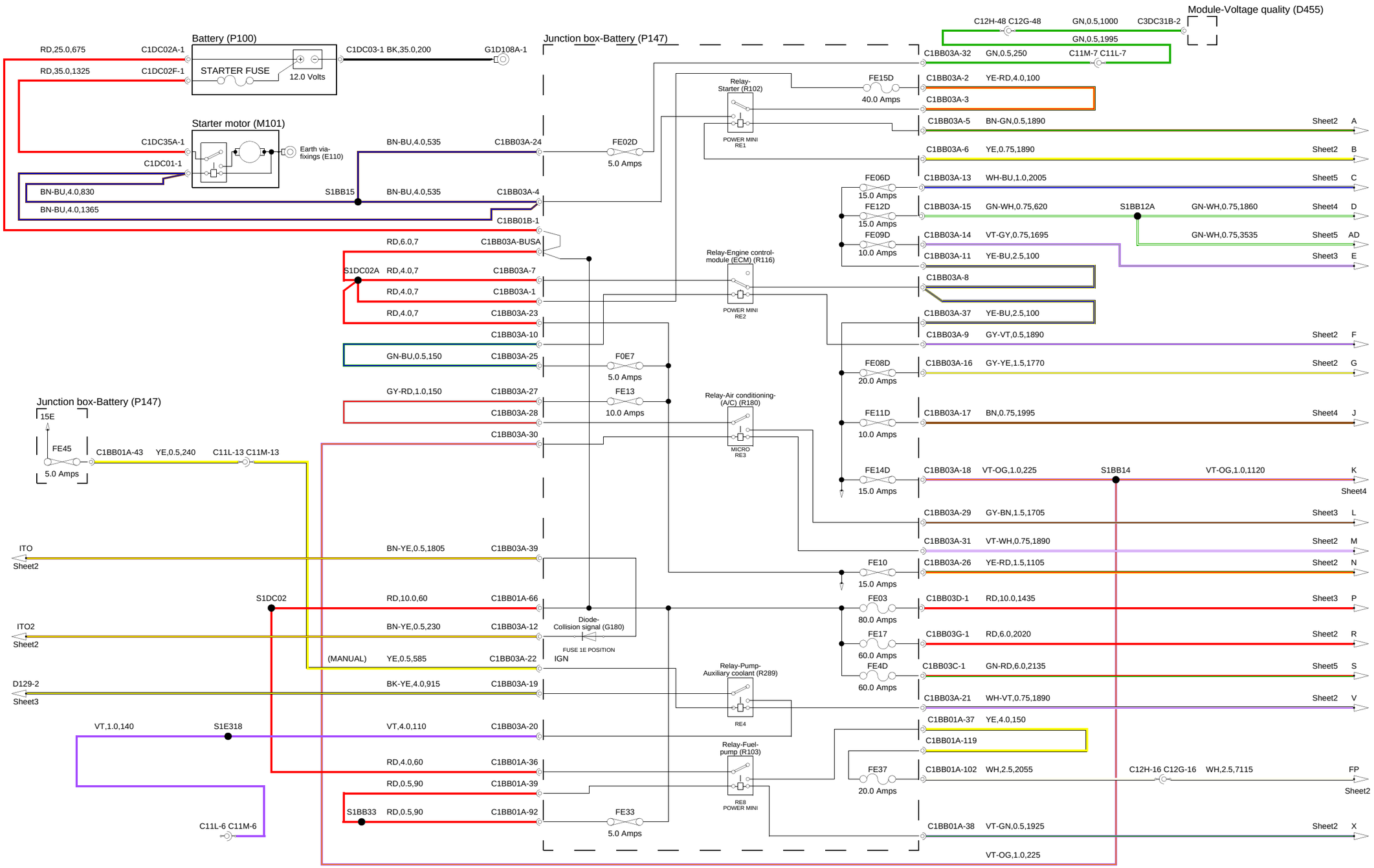
Battery (P100)
STARTER FUSE
12.0 Volts
Starter motor (M101)
Earth via-fixings (E110)
Junction box-Battery (P147)
Module-Voltage quality (D455)
Relay-Starter (R102)
POWER MINI RE1
Relay-Engine control-module (ECM) (R116)
POWER MINI RE2
Relay-Air conditioning-(A/C) (R180)
MICRO RE3
Relay-Pump-Auxiliary coolant (R289)
RE4
Relay-Fuel-pump (R103)
RE8 POWER MINI
Diode-Collision signal (G180)
FUSE 1E POSITION
ITO
ITO2
D129-2
Sheet2
Sheet3
Sheet4
Sheet5
RD,25.0,675
RD,35.0,1325
C1DC02A-1
C1DC02F-1
C1DC03-1 BK,35.0,200
G1D108A-1
C1DC35A-1
C1DC01-1
BN-BU,4.0,830
BN-BU,4.0,1365
S1BB15
BN-BU,4.0,535
C1BB03A-24
C1BB03A-4
FE02D
5.0 Amps
C1BB01B-1
RD,6.0,7
C1BB03A-BUSA
S1DC02A
RD,4.0,7
C1BB03A-7
C1BB03A-1
C1BB03A-23
C1BB03A-10
GN-BU,0.5,150
C1BB03A-25
F0E7
5.0 Amps
GY-RD,1.0,150
C1BB03A-27
FE13
10.0 Amps
C1BB03A-28
C1BB03A-30
15E
FE45
5.0 Amps
C1BB01A-43 YE,0.5,240 C11L-13 C11M-13
BN-YE,0.5,1805
C1BB03A-39
S1DC02
RD,10.0,60
C1BB01A-66
BN-YE,0.5,230
C1BB03A-12
(MANUAL) YE,0.5,585
C1BB03A-22
IGN
BK-YE,4.0,915
C1BB03A-19
VT,1.0,140
S1E318
VT,4.0,110
C1BB03A-20
RD,4.0,60
C1BB01A-36
RD,0.5,90
C1BB01A-39
S1BB33 RD,0.5,90
C1BB01A-92
FE33
5.0 Amps
C11L-6 C11M-6
C12H-48 C12G-48 GN,0.5,1000 C3DC31B-2
GN,0.5,1995
C1BB03A-32 GN,0.5,250 C11M-7 C11L-7
FE15D
40.0 Amps
C1BB03A-2 YE-RD,4.0,100
C1BB03A-3
C1BB03A-5 BN-GN,0.5,1890
C1BB03A-6 YE,0.75,1890
FE06D
15.0 Amps
C1BB03A-13 WH-BU,1.0,2005
FE12D
15.0 Amps
C1BB03A-15 GN-WH,0.75,620
S1BB12A
GN-WH,0.75,1860
FE09D
10.0 Amps
C1BB03A-14 VT-GY,0.75,1695
GN-WH,0.75,3535
C1BB03A-11 YE-BU,2.5,100
C1BB03A-8
C1BB03A-37 YE-BU,2.5,100
C1BB03A-9 GY-VT,0.5,1890
FE08D
20.0 Amps
C1BB03A-16 GY-YE,1.5,1770
FE11D
10.0 Amps
C1BB03A-17 BN,0.75,1995
FE14D
15.0 Amps
C1BB03A-18 VT-OG,1.0,225
S1BB14
VT-OG,1.0,1120
C1BB03A-29 GY-BN,1.5,1705
C1BB03A-31 VT-WH,0.75,1890
FE10
15.0 Amps
C1BB03A-26 YE-RD,1.5,1105
FE03
80.0 Amps
C1BB03D-1 RD,10.0,1435
FE17
60.0 Amps
C1BB03G-1 RD,6.0,2020
FE4D
60.0 Amps
C1BB03C-1 GN-RD,6.0,2135
C1BB03A-21 WH-VT,0.75,1890
C1BB01A-37 YE,4.0,150
C1BB01A-119
FE37
20.0 Amps
C1BB01A-102 WH,2.5,2055
C12H-16 C12G-16 WH,2.5,7115
C1BB01A-38 VT-GN,0.5,1925
VT-OG,1.0,225
A
B
C
D
AD
E
F
G
J
K
L
M
N
P
R
S
V
FP
X

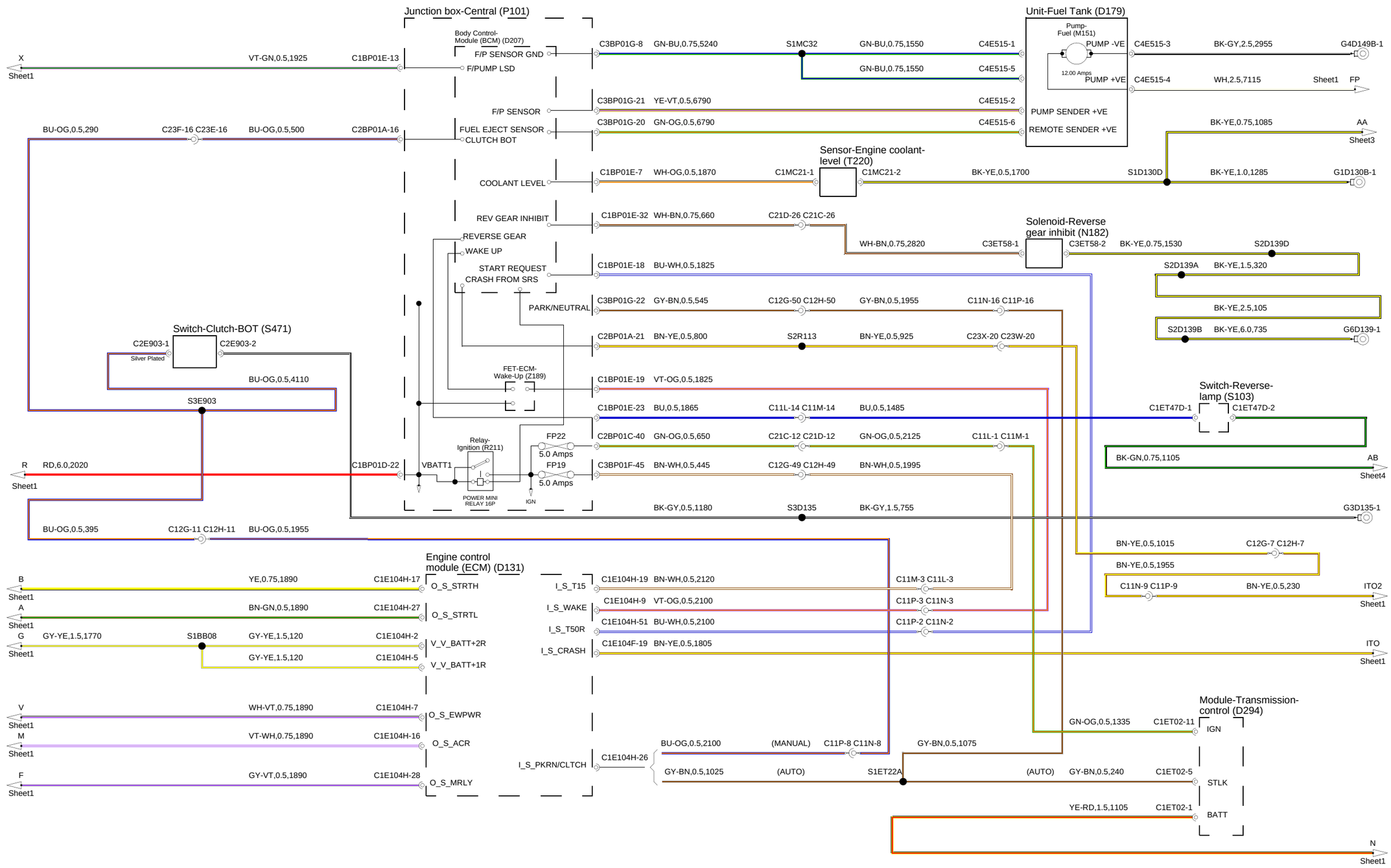
Junction box-Central (P101)
Body Control-Module (BCM) (D207)
F/P SENSOR GND
F/PUMP LSD
F/P SENSOR
FUEL EJECT SENSOR
CLUTCH BOT
COOLANT LEVEL
REV GEAR INHIBIT
REVERSE GEAR
WAKE UP
START REQUEST
CRASH FROM SRS
PARK/NEUTRAL
FET-ECM-Wake-Up (Z189)
Relay-Ignition (R211)
POWER MINI RELAY 16P
VBATT1
IGN
FP22
5.0 Amps
FP19
5.0 Amps
Unit-Fuel Tank (D179)
Pump-Fuel (M151)
PUMP -VE
PUMP +VE
12.00 Amps
PUMP SENDER +VE
REMOTE SENDER +VE
Sensor-Engine coolant-level (T220)
Solenoid-Reverse gear inhibit (N182)
Switch-Clutch-BOT (S471)
Silver Plated
Switch-Reverse-lamp (S103)
Engine control module (ECM) (D131)
O_S_STRTH
O_S_STRTL
V_V_BATT+2R
V_V_BATT+1R
O_S_EWPWR
O_S_ACR
O_S_MRLY
I_S_T15
I_S_WAKE
I_S_T50R
I_S_CRASH
I_S_PKRN/CLTCH
Module-Transmission-control (D294)
IGN
STLK
BATT
X
Sheet1
R
Sheet1
B
Sheet1
A
Sheet1
G
Sheet1
V
Sheet1
M
Sheet1
F
Sheet1
Sheet3
Sheet4
FP
AA
AB
ITO2
ITO
N
VT-GN,0.5,1925
C1BP01E-13
C3BP01G-8
GN-BU,0.75,5240
S1MC32
GN-BU,0.75,1550
C4E515-1
GN-BU,0.75,1550
C4E515-5
C4E515-3
BK-GY,2.5,2955
G4D149B-1
C4E515-4
WH,2.5,7115
C3BP01G-21
YE-VT,0.5,6790
C4E515-2
C3BP01G-20
GN-OG,0.5,6790
C4E515-6
BK-YE,0.75,1085
BU-OG,0.5,290
C23F-16 C23E-16
BU-OG,0.5,500
C2BP01A-16
C1BP01E-7
WH-OG,0.5,1870
C1MC21-1
C1MC21-2
BK-YE,0.5,1700
S1D130D
BK-YE,1.0,1285
G1D130B-1
C1BP01E-32
WH-BN,0.75,660
C21D-26 C21C-26
WH-BN,0.75,2820
C3ET58-1
C3ET58-2
BK-YE,0.75,1530
S2D139D
S2D139A
BK-YE,1.5,320
C1BP01E-18
BU-WH,0.5,1825
BK-YE,2.5,105
S2D139B
BK-YE,6.0,735
G6D139-1
C3BP01G-22
GY-BN,0.5,545
C12G-50 C12H-50
GY-BN,0.5,1955
C11N-16 C11P-16
C2E903-1
C2E903-2
C2BP01A-21
BN-YE,0.5,800
S2R113
BN-YE,0.5,925
C23X-20 C23W-20
BU-OG,0.5,4110
S3E903
C1BP01E-19
VT-OG,0.5,1825
C1BP01E-23
BU,0.5,1865
C11L-14 C11M-14
BU,0.5,1485
C1ET47D-1
C1ET47D-2
C2BP01C-40
GN-OG,0.5,650
C21C-12 C21D-12
GN-OG,0.5,2125
C11L-1 C11M-1
BK-GN,0.75,1105
RD,6.0,2020
C1BP01D-22
C3BP01F-45
BN-WH,0.5,445
C12G-49 C12H-49
BN-WH,0.5,1995
BK-GY,0.5,1180
S3D135
BK-GY,1.5,755
G3D135-1
BU-OG,0.5,395
C12G-11 C12H-11
BU-OG,0.5,1955
BN-YE,0.5,1015
C12G-7 C12H-7
BN-YE,0.5,1955
C11N-9 C11P-9
BN-YE,0.5,230
YE,0.75,1890
C1E104H-17
C1E104H-19
BN-WH,0.5,2120
C11M-3 C11L-3
BN-GN,0.5,1890
C1E104H-27
C1E104H-9
VT-OG,0.5,2100
C11P-3 C11N-3
C1E104H-51
BU-WH,0.5,2100
C11P-2 C11N-2
GY-YE,1.5,1770
S1BB08
GY-YE,1.5,120
C1E104H-2
C1E104H-5
C1E104F-19
BN-YE,0.5,1805
WH-VT,0.75,1890
C1E104H-7
VT-WH,0.75,1890
C1E104H-16
GY-VT,0.5,1890
C1E104H-28
C1E104H-26
BU-OG,0.5,2100
(MANUAL)
C11P-8 C11N-8
GY-BN,0.5,1075
GY-BN,0.5,1025
(AUTO)
S1ET22A
(AUTO)
GY-BN,0.5,240
C1ET02-5
GN-OG,0.5,1335
C1ET02-11
YE-RD,1.5,1105
C1ET02-1

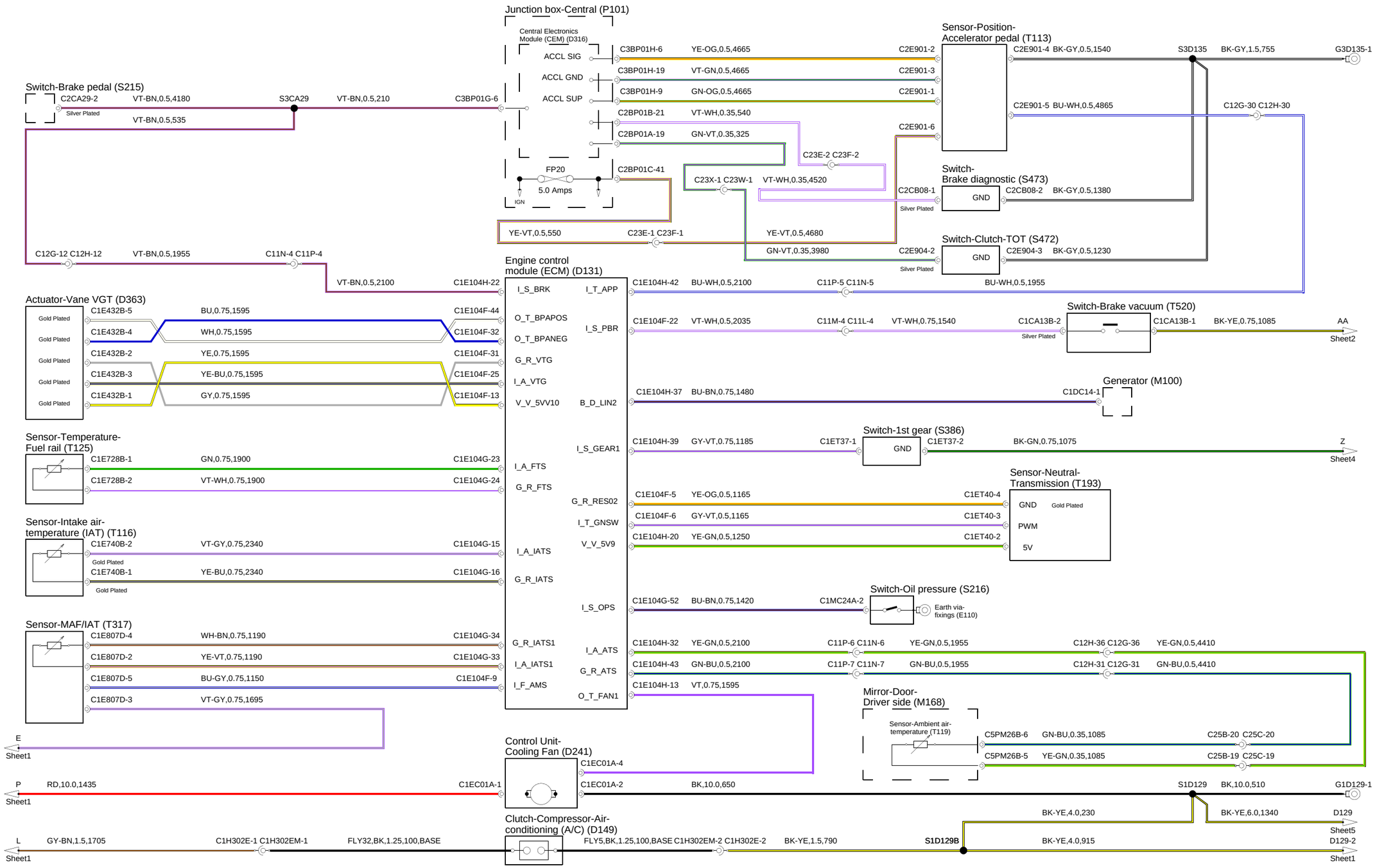
Junction box-Central (P101)
Central Electronics Module (CEM) (D316)
ACCL SIG
ACCL GND
ACCL SUP
FP20
5.0 Amps
IGN
C3BP01H-6 YE-OG,0.5,4665 C2E901-2
C3BP01H-19 VT-GN,0.5,4665 C2E901-3
C3BP01H-9 GN-OG,0.5,4665 C2E901-1
C2BP01B-21 VT-WH,0.35,540
C2BP01A-19 GN-VT,0.35,325
C2BP01C-41
C23E-2 C23F-2
C23X-1 C23W-1 VT-WH,0.35,4520
YE-VT,0.5,550 C23E-1 C23F-1 YE-VT,0.5,4680
GN-VT,0.35,3980
Sensor-Position-Accelerator pedal (T113)
C2E901-4 BK-GY,0.5,1540 S3D135 BK-GY,1.5,755 G3D135-1
C2E901-5 BU-WH,0.5,4865 C12G-30 C12H-30
C2E901-6
Switch-Brake diagnostic (S473)
C2CB08-1 GND C2CB08-2 BK-GY,0.5,1380
Silver Plated
Switch-Clutch-TOT (S472)
C2E904-2 GND C2E904-3 BK-GY,0.5,1230
Silver Plated
Switch-Brake pedal (S215)
C2CA29-2 VT-BN,0.5,4180 S3CA29 VT-BN,0.5,210 C3BP01G-6
Silver Plated
VT-BN,0.5,535
C12G-12 C12H-12 VT-BN,0.5,1955 C11N-4 C11P-4
VT-BN,0.5,2100 C1E104H-22
Engine control module (ECM) (D131)
I_S_BRK I_T_APP
O_T_BPAPOS
O_T_BPANEG I_S_PBR
G_R_VTG
I_A_VTG
V_V_5VV10 B_D_LIN2
I_S_GEAR1
I_A_FTS
G_R_FTS
G_R_RES02
I_T_GNSW
V_V_5V9
I_A_IATS
G_R_IATS
I_S_OPS
G_R_IATS1 I_A_ATS
I_A_IATS1 G_R_ATS
I_F_AMS O_T_FAN1
C1E104H-42 BU-WH,0.5,2100 C11P-5 C11N-5 BU-WH,0.5,1955
C1E104F-22 VT-WH,0.5,2035 C11M-4 C11L-4 VT-WH,0.75,1540 C1CA13B-2
Silver Plated
Switch-Brake vacuum (T520)
C1CA13B-1 BK-YE,0.75,1085 AA
Sheet2
C1E104H-37 BU-BN,0.75,1480 C1DC14-1
Generator (M100)
C1E104H-39 GY-VT,0.75,1185 C1ET37-1 GND C1ET37-2 BK-GN,0.75,1075 Z
Sheet4
Switch-1st gear (S386)
C1E104F-5 YE-OG,0.5,1165 C1ET40-4
C1E104F-6 GY-VT,0.5,1165 C1ET40-3
C1E104H-20 YE-GN,0.5,1250 C1ET40-2
Sensor-Neutral-Transmission (T193)
GND Gold Plated
PWM
5V
C1E104G-52 BU-BN,0.75,1420 C1MC24A-2
Switch-Oil pressure (S216)
Earth via-fixings (E110)
C1E104H-32 YE-GN,0.5,2100 C11P-6 C11N-6 YE-GN,0.5,1955 C12H-36 C12G-36 YE-GN,0.5,4410
C1E104H-43 GN-BU,0.5,2100 C11P-7 C11N-7 GN-BU,0.5,1955 C12H-31 C12G-31 GN-BU,0.5,4410
C1E104H-13 VT,0.75,1595
Mirror-Door-Driver side (M168)
Sensor-Ambient air-temperature (T119)
C5PM26B-6 GN-BU,0.35,1085 C25B-20 C25C-20
C5PM26B-5 YE-GN,0.35,1085 C25B-19 C25C-19
Actuator-Vane VGT (D363)
Gold Plated
C1E432B-5 BU,0.75,1595 C1E104F-44
C1E432B-4 WH,0.75,1595 C1E104F-32
C1E432B-2 YE,0.75,1595 C1E104F-31
C1E432B-3 YE-BU,0.75,1595 C1E104F-25
C1E432B-1 GY,0.75,1595 C1E104F-13
Sensor-Temperature-Fuel rail (T125)
C1E728B-1 GN,0.75,1900 C1E104G-23
C1E728B-2 VT-WH,0.75,1900 C1E104G-24
Sensor-Intake air-temperature (IAT) (T116)
C1E740B-2 VT-GY,0.75,2340 C1E104G-15
Gold Plated
C1E740B-1 YE-BU,0.75,2340 C1E104G-16
Gold Plated
Sensor-MAF/IAT (T317)
C1E807D-4 WH-BN,0.75,1190 C1E104G-34
C1E807D-2 YE-VT,0.75,1190 C1E104G-33
C1E807D-5 BU-GY,0.75,1150 C1E104F-9
C1E807D-3 VT-GY,0.75,1695
E
Sheet1
Control Unit-Cooling Fan (D241)
C1EC01A-4
P RD,10.0,1435 C1EC01A-1
Sheet1
C1EC01A-2 BK,10.0,650 S1D129 BK,10.0,510 G1D129-1
BK-YE,4.0,230 BK-YE,6.0,1340 D129
Sheet5
Clutch-Compressor-Air-conditioning (A/C) (D149)
L GY-BN,1.5,1705 C1H302E-1 C1H302EM-1 FLY32,BK,1.25,100,BASE
FLY5,BK,1.25,100,BASE C1H302EM-2 C1H302E-2 BK-YE,1.5,790 S1D129B BK-YE,4.0,915 D129-2
Sheet1
Sheet1

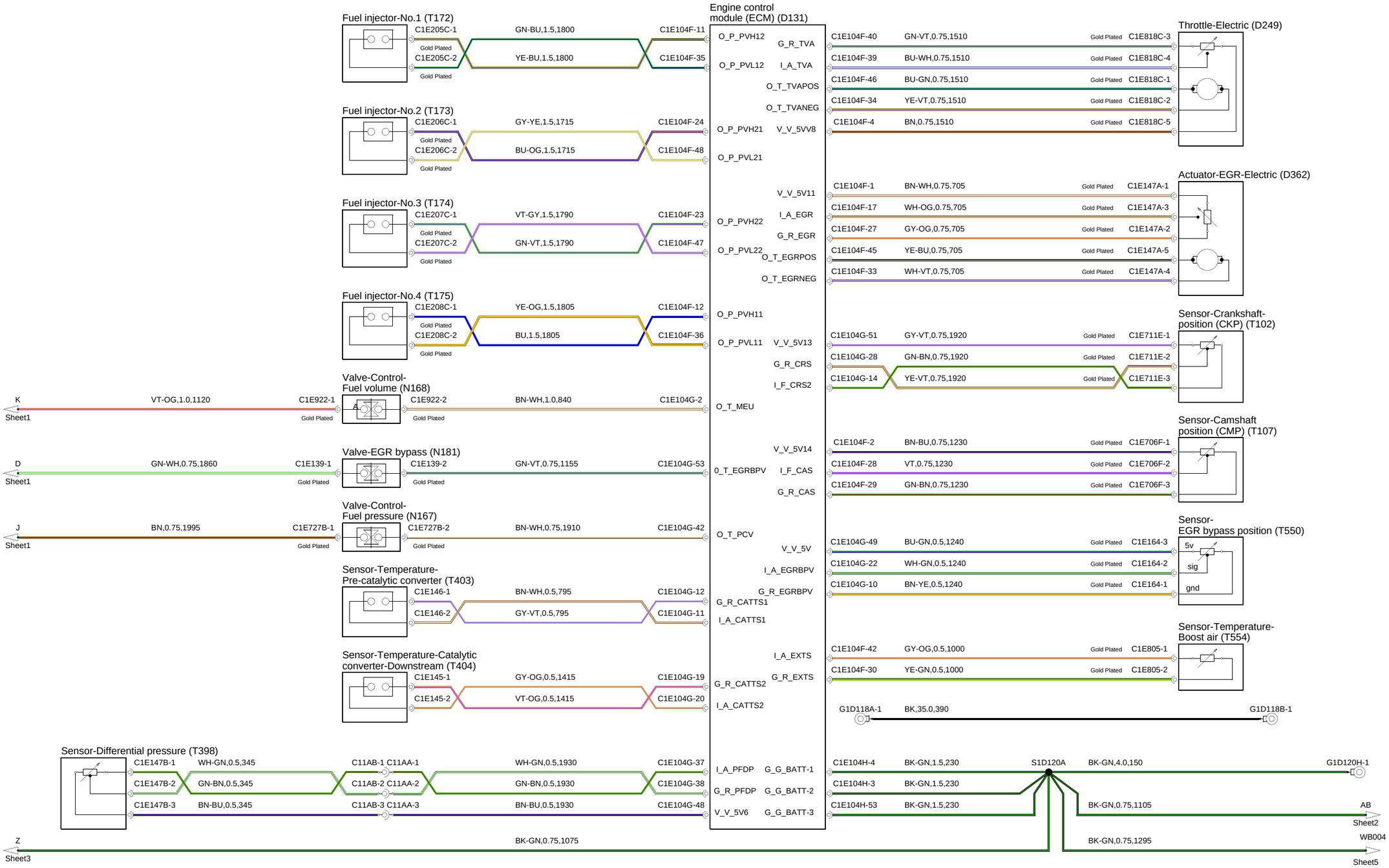
Engine control module (ECM) (D131)
Fuel injector-No.1 (T172)
C1E205C-1 GN-BU,1.5,1800 C1E104F-11
C1E205C-2 YE-BU,1.5,1800 C1E104F-35
Gold Plated
Fuel injector-No.2 (T173)
C1E206C-1 GY-YE,1.5,1715 C1E104F-24
C1E206C-2 BU-OG,1.5,1715 C1E104F-48
Fuel injector-No.3 (T174)
C1E207C-1 VT-GY,1.5,1790 C1E104F-23
C1E207C-2 GN-VT,1.5,1790 C1E104F-47
Fuel injector-No.4 (T175)
C1E208C-1 YE-OG,1.5,1805 C1E104F-12
C1E208C-2 BU,1.5,1805 C1E104F-36
Valve-Control-Fuel volume (N168)
K VT-OG,1.0,1120 C1E922-1 Sheet1
C1E922-2 BN-WH,1.0,840 C1E104G-2
Valve-EGR bypass (N181)
D GN-WH,0.75,1860 C1E139-1 Sheet1
C1E139-2 GN-VT,0.75,1155 C1E104G-53
Valve-Control-Fuel pressure (N167)
J BN,0.75,1995 C1E727B-1 Sheet1
C1E727B-2 BN-WH,0.75,1910 C1E104G-42
Sensor-Temperature-Pre-catalytic converter (T403)
C1E146-1 BN-WH,0.5,795 C1E104G-12
C1E146-2 GY-VT,0.5,795 C1E104G-11
Sensor-Temperature-Catalytic converter-Downstream (T404)
C1E145-1 GY-OG,0.5,1415 C1E104G-19
C1E145-2 VT-OG,0.5,1415 C1E104G-20
Sensor-Differential pressure (T398)
C1E147B-1 WH-GN,0.5,345 C11AB-1 C11AA-1 WH-GN,0.5,1930 C1E104G-37
C1E147B-2 GN-BN,0.5,345 C11AB-2 C11AA-2 GN-BN,0.5,1930 C1E104G-38
C1E147B-3 BN-BU,0.5,345 C11AB-3 C11AA-3 BN-BU,0.5,1930 C1E104G-48
Z BK-GN,0.75,1075 Sheet3
O_P_PVH12 G_R_TVA
O_P_PVL12 I_A_TVA
O_T_TVAPOS
O_T_TVANEG
O_P_PVH21 V_V_5VV8
O_P_PVL21
V_V_5V11
O_P_PVH22 I_A_EGR
G_R_EGR
O_P_PVL22 O_T_EGRPOS
O_T_EGRNEG
O_P_PVH11
O_P_PVL11 V_V_5V13
G_R_CRS
I_F_CRS2
O_T_MEU
V_V_5V14
0_T_EGRBPV I_F_CAS
G_R_CAS
O_T_PCV
V_V_5V
I_A_EGRBPV
G_R_EGRBPV
G_R_CATTS1
I_A_CATTS1
I_A_EXTS
G_R_CATTS2 G_R_EXTS
I_A_CATTS2
I_A_PFDP G_G_BATT-1
G_R_PFDP G_G_BATT-2
V_V_5V6 G_G_BATT-3
Throttle-Electric (D249)
C1E104F-40 GN-VT,0.75,1510 C1E818C-3
C1E104F-39 BU-WH,0.75,1510 C1E818C-4
C1E104F-46 BU-GN,0.75,1510 C1E818C-1
C1E104F-34 YE-VT,0.75,1510 C1E818C-2
C1E104F-4 BN,0.75,1510 C1E818C-5
Actuator-EGR-Electric (D362)
C1E104F-1 BN-WH,0.75,705 C1E147A-1
C1E104F-17 WH-OG,0.75,705 C1E147A-3
C1E104F-27 GY-OG,0.75,705 C1E147A-2
C1E104F-45 YE-BU,0.75,705 C1E147A-5
C1E104F-33 WH-VT,0.75,705 C1E147A-4
Sensor-Crankshaft-position (CKP) (T102)
C1E104G-51 GY-VT,0.75,1920 C1E711E-1
C1E104G-28 GN-BN,0.75,1920 C1E711E-2
C1E104G-14 YE-VT,0.75,1920 C1E711E-3
Sensor-Camshaft position (CMP) (T107)
C1E104F-2 BN-BU,0.75,1230 C1E706F-1
C1E104F-28 VT,0.75,1230 C1E706F-2
C1E104F-29 GN-BN,0.75,1230 C1E706F-3
Sensor-EGR bypass position (T550)
C1E104G-49 BU-GN,0.5,1240 C1E164-3
C1E104G-22 WH-GN,0.5,1240 C1E164-2
C1E104G-10 BN-YE,0.5,1240 C1E164-1
5v
sig
gnd
Sensor-Temperature-Boost air (T554)
C1E104F-42 GY-OG,0.5,1000 C1E805-1
C1E104F-30 YE-GN,0.5,1000 C1E805-2
G1D118A-1 BK,35.0,390 G1D118B-1
C1E104H-4 BK-GN,1.5,230 S1D120A BK-GN,4.0,150 G1D120H-1
C1E104H-3 BK-GN,1.5,230
C1E104H-53 BK-GN,1.5,230 BK-GN,0.75,1105 AB Sheet2
BK-GN,0.75,1295 WB004 Sheet5

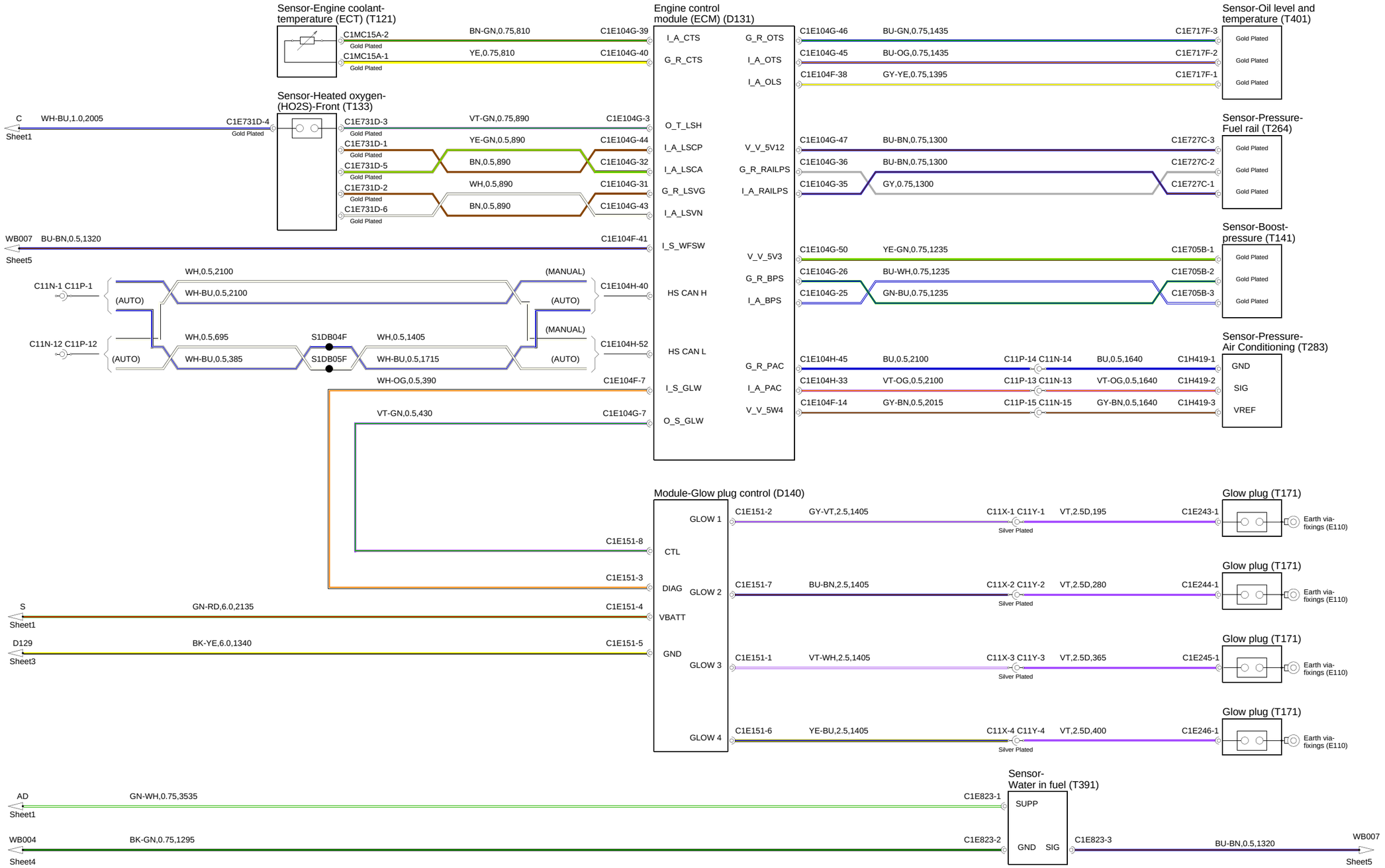
Sensor-Engine coolant-temperature (ECT) (T121)
C1MC15A-2
Gold Plated
C1MC15A-1
Gold Plated
BN-GN,0.75,810
YE,0.75,810
C1E104G-39
C1E104G-40
Engine control module (ECM) (D131)
I_A_CTS
G_R_CTS
G_R_OTS
I_A_OTS
I_A_OLS
Sensor-Oil level and temperature (T401)
C1E104G-46
C1E104G-45
C1E104F-38
BU-GN,0.75,1435
BU-OG,0.75,1435
GY-YE,0.75,1395
C1E717F-3
C1E717F-2
C1E717F-1
Gold Plated
Sensor-Heated oxygen-(HO2S)-Front (T133)
C
Sheet1
WH-BU,1.0,2005
C1E731D-4
Gold Plated
C1E731D-3
C1E731D-1
C1E731D-5
C1E731D-2
C1E731D-6
VT-GN,0.75,890
YE-GN,0.5,890
BN,0.5,890
WH,0.5,890
BN,0.5,890
C1E104G-3
C1E104G-44
C1E104G-32
C1E104G-31
C1E104G-43
O_T_LSH
I_A_LSCP
I_A_LSCA
G_R_LSVG
I_A_LSVN
V_V_5V12
G_R_RAILPS
I_A_RAILPS
Sensor-Pressure-Fuel rail (T264)
C1E104G-47
C1E104G-36
C1E104G-35
BU-BN,0.75,1300
BU-BN,0.75,1300
GY,0.75,1300
C1E727C-3
C1E727C-2
C1E727C-1
WB007
Sheet5
BU-BN,0.5,1320
C1E104F-41
I_S_WFSW
V_V_5V3
G_R_BPS
I_A_BPS
Sensor-Boost-pressure (T141)
C1E104G-50
C1E104G-26
C1E104G-25
YE-GN,0.75,1235
BU-WH,0.75,1235
GN-BU,0.75,1235
C1E705B-1
C1E705B-2
C1E705B-3
C11N-1 C11P-1
(AUTO)
WH,0.5,2100
WH-BU,0.5,2100
(MANUAL)
(AUTO)
C1E104H-40
HS CAN H
C11N-12 C11P-12
(AUTO)
WH,0.5,695
WH-BU,0.5,385
S1DB04F
S1DB05F
WH,0.5,1405
WH-BU,0.5,1715
(MANUAL)
(AUTO)
C1E104H-52
HS CAN L
Sensor-Pressure-Air Conditioning (T283)
C1E104H-45
C1E104H-33
C1E104F-14
BU,0.5,2100
VT-OG,0.5,2100
GY-BN,0.5,2015
C11P-14 C11N-14
C11P-13 C11N-13
C11P-15 C11N-15
BU,0.5,1640
VT-OG,0.5,1640
GY-BN,0.5,1640
C1H419-1
C1H419-2
C1H419-3
GND
SIG
VREF
G_R_PAC
I_A_PAC
V_V_5W4
WH-OG,0.5,390
C1E104F-7
I_S_GLW
VT-GN,0.5,430
C1E104G-7
O_S_GLW
Module-Glow plug control (D140)
C1E151-8
CTL
C1E151-3
DIAG
S
Sheet1
GN-RD,6.0,2135
C1E151-4
VBATT
D129
Sheet3
BK-YE,6.0,1340
C1E151-5
GND
GLOW 1
GLOW 2
GLOW 3
GLOW 4
C1E151-2
C1E151-7
C1E151-1
C1E151-6
GY-VT,2.5,1405
BU-BN,2.5,1405
VT-WH,2.5,1405
YE-BU,2.5,1405
C11X-1 C11Y-1
C11X-2 C11Y-2
C11X-3 C11Y-3
C11X-4 C11Y-4
Silver Plated
VT,2.5D,195
VT,2.5D,280
VT,2.5D,365
VT,2.5D,400
C1E243-1
C1E244-1
C1E245-1
C1E246-1
Glow plug (T171)
Earth via-fixings (E110)
Sensor-Water in fuel (T391)
AD
Sheet1
GN-WH,0.75,3535
C1E823-1
SUPP
WB004
Sheet4
BK-GN,0.75,1295
C1E823-2
GND
SIG
C1E823-3
BU-BN,0.5,1320
WB007
Sheet5